8031 NW Camp Azalea Rd.
Chiefland, Florida, USA 32626

Inline/End Of Line Flame Arrestor Series-A

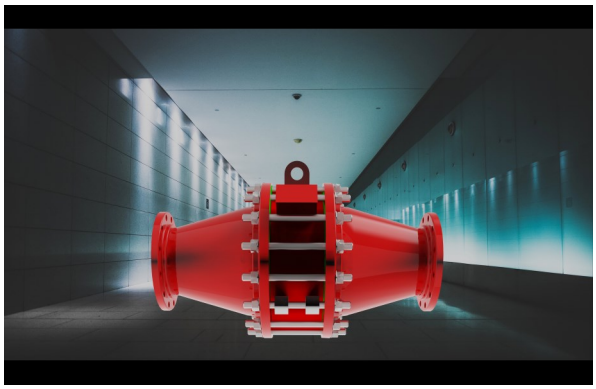

The Paradox Standard In-Line Flame Arrestor prevents flame propagation by acting as a heat sink, cooling the flame front to cause it to be extinguished. This heat sink is made from spiral wound crimped ribbon that allows gas to flow with a minimum pressure drop.

Standard Flame Arresters are only used for pipe lengths of less than 4 to 20 feet with one pipe bend depending on gas group, & model size. In addition, it stops confined and unconfined, low-pressure deflagrations. All Paradox units are bi-directional and are proven to stop an ignited flammable vapor mixture approaching from either direction or traveling at subsonic velocities.

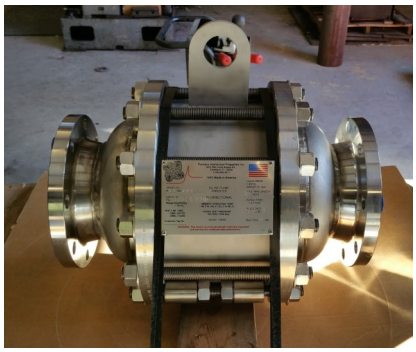

Designed with flanged connections.
All our arresters come with strong lifting points designed to lift the entire unit and then some.
The arrestor provides the option of removal of the flame cell (element) for easy cleaning and replacement without disconnection of the pipe connection flanges. Standard housing construction is carbon steel and stainless steel. The element is available in 304 SS, 316 SS & Hastelloy. Special material and protective coatings are available on request, except for Aluminum. We do not fabricate any aluminum flame arrester products and consider them to be a liability.

Gas Groups IIA (D)
IIB3 (C)
IIC (B)

- Tested for 2" (50mm) through 24" (600mm)

Copyright 2022
email:dwight@paradoxip.com
Office: +1 352-493-0616
Mobile: +1 352-949-4442

Series-A Flame Arrestors

Features and Benefits

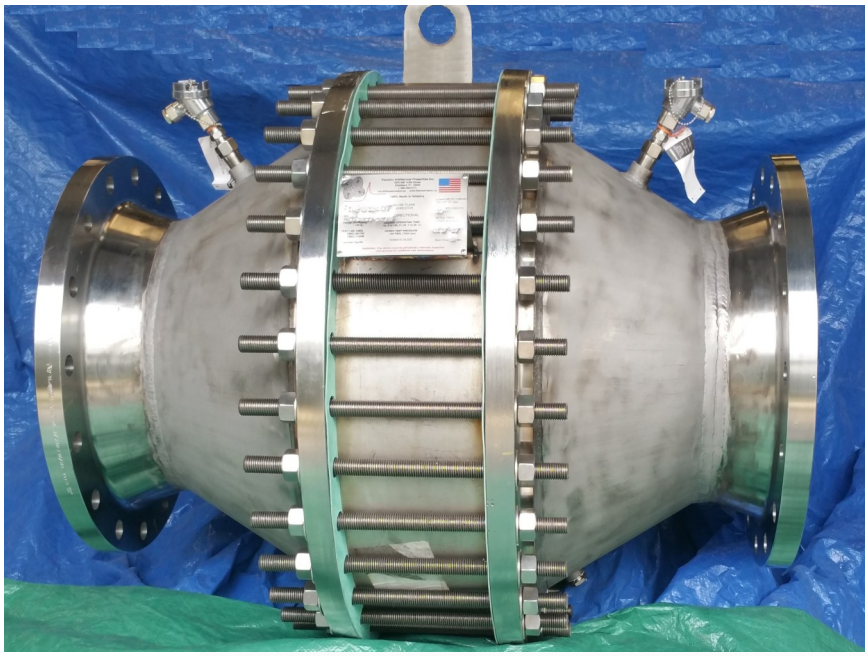

• ***All Paradox Detonation Arrestors*** are designed for low pressure deflagrations.

- ***Removable Element*** design allows for easy replacement.
- ***Large Inspection Ports*** are ***available*** on most models and allows for easy inspection and cleaning.
- outstanding corrosion and chemical resistance.
- ***Temperature ports optional in 1/2", 3/4" or 1" NPTF.***
- ***Diff/pressure ports optional in 1/2", 3/4" or 1" NPTF***
- ***Drains ports*** on ***optional in 1/2", 3/4" or 1" NPTF***
- Instrumentation can be supplied as well.

Due to a potential failure, caused by melting of an aluminum element during a stabilized flame, we will not supply flame arresters made with aluminum castings and /or elements.

Paradox's Large Crimp Opening Provide:

- Maximum flow
- Less Pressure Drop
- Easy Cleaning
- Less Clogging
- Less Maintenance
- Bi-directional Design
- Available in ANSI, DIN and JIS flange and NPT.

Material Specifications

Housing	Cell	Gas Group
Carbon Steel	304 SS	IIA (D)
304 SS	316 SS	IIB3 (C)
316L SS	Hastelloy	
Hastelloy		

Copyright 2022
email:dwight@paradoxip.com
Office: +1 352-493-0616
Mobile: +1 352-949-4442

Model A– Deflagration Arrester

SERIES-A Flame Arrester Specifications

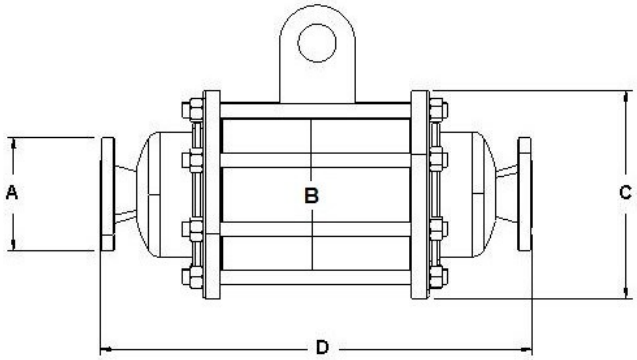

Model	A 150# ANSI Conn. Size in. (mm) (Optional 125# FF)	B Housing Size In. (mm)	C Outside Diameter In. (mm)	D Overall Length In. (mm)	Approx. Weight Lb.(Kg.) Grp D
A-1C	1 (25)	4 (101)	7.75 (196)	15 (381)	60 (27.2)
A-2C	2 (50)	6 (152.4)	9.0 (229)	15.18 (401.32)	65 (29.48)
A-3C(6)	3 (75)	6 (152.4)	9.0 (229)	18 (457)	80(36)
A-3C(8)	3 (75)	8 (200)	11 (279)	19 (482.6)	100 (45.3)
A-4C	4 (100)	8 (200)	11 (279)	19 (482.6)	110(50)
A-6C(10)	6 (150)	10(254)	13.5 (343)	19.75 (502)	140 (63)
A-6C(12)	6 (150)	12(304)	16 (406)	23 (584)	280(127)
A-8C(14)	8 (200)	18 (457)	23.5 (596)	29(737)	280(127)
A-8C(16)	8 (200)	16 (400)	20 (509)	34 (863)	270 (123)
A-10C(20)	10 (254)	20 (508)	23.5 (596)	44(1119)	330(149)
A-12C	12 (304)	22 (558)	27.5 (698)	31.7 (805)	450 (204)

Intermediate sizes may not be listed. & Sizes 14” through 36”and larger—dimensions available on request.

Copyright 2022
email:dwight@paradoxip.com
Office: +1 352-493-0616
Mobile: +1 352-949-4442

Series “A” In-Line Flame Arrester for Group D, C, or B Gas
Specification Data Sheet

Flame Arrester Type	**In-line Bi- Directional Flame Arrester**
Recommended installation /use	Vertically or Horizontally in Piping systems with a maximum 4’ to 20’ of pipe & one elbow from the ignition source depending on gas group, model & size. (Group “B” straight run-up only, no elbow)
Design/Test Standard/Test Gas	UL525/Propane/Ethylene/Hydrogen
Connection sizes	2” through 24” Pipe sizes
Type of connection	Flanged or threaded connection available.
Flange ratings	Available in ASME 150/125# Flat Face or Raised Faced Flange
Housing Materials	Standard Model; Carbon Steel, also available in 304, 316L & most other Austenitic metal or hastel-loy.
Element Type/Material	The element is crimped metal ribbon made from 304 Stainless Steel and is also available in 316L or hastelloy.
Maximum Initial pressure	15.7 Psia.
Operating temperature range	-20ºF to 140ºF or (1024ºC for 5 minutes Stabilized Burn Condition)
Hydrostatic Test Pressure	150 Psig.
Gas Group Application Rating	NEC Group D,C, B(IEC Group IIA, IIB, IIC)